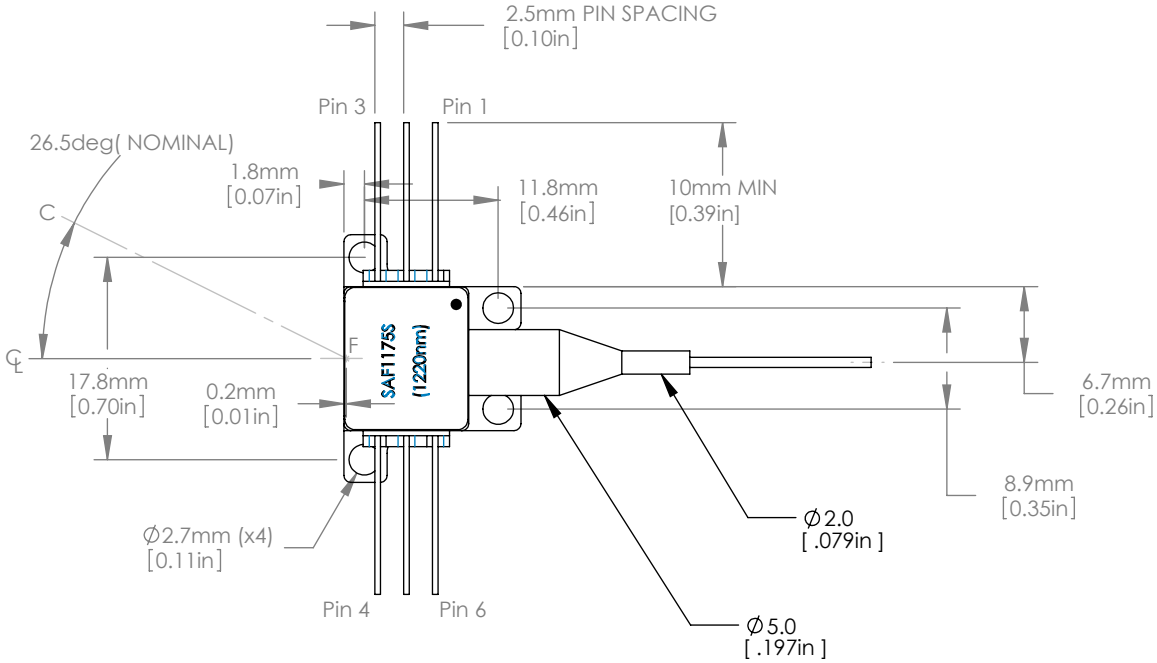

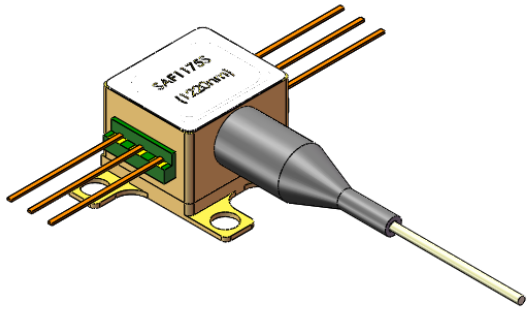

PIN IDENTIFICATION

1. TEC +
2. THERMISTOR
3. THERMISTOR
4. DEV. ANODE
5. DEV CATHODE
6. TEC -

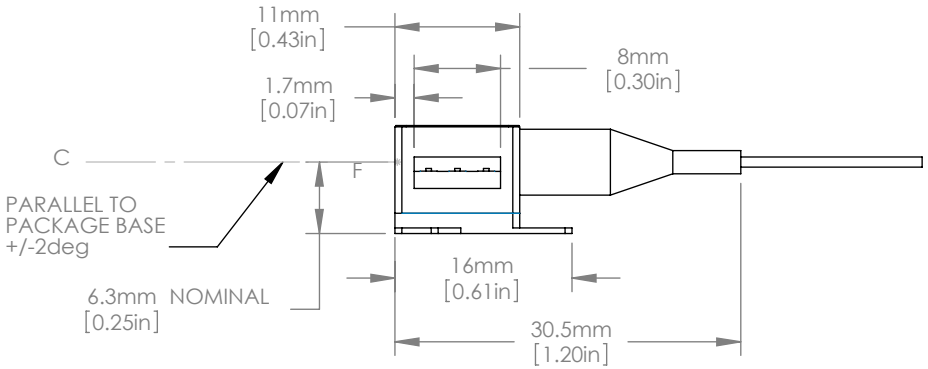

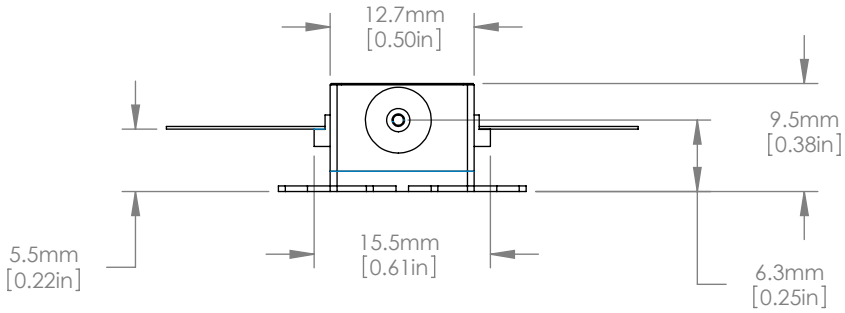

NOTES :

1. F DENOTES EMISSION POINT FROM CHIP FACET
   C DENOTES CENTRAL AXIS FOR EMERGENT BEAM
2. DEVICE IS PROVIDED WITH 900um DIAMETER LOOSE TUBE PROTECTED CORNING Hi1060 FIBER TAIL, 1000mm +/- 100mm LENGTH AND TERMINATED IN AN FC/APC CONNECTOR

FOR INFORMATION ONLY
NOT FOR MANUFACTURING PURPOSES

DRAWING PROJECTION		
	NAME	DATE
DRAWN	AD	01/OCT/10
APPROVAL	LS	01/OCT/10

COPYRIGHT © 2010 BY THORLABS
PROPRIETARY AND CONFIDENTIAL

VALUES IN PARENTHESIS ARE CALCULATED AND MAY CONTAIN ROUNDOFF ERRORS

THORLABS
www.thorlabs.com

SAF Gain Chip Assembly (1220nm)

MATERIAL	REV
N/A	A

ITEM #	APPROX WEIGHT
SAF1175S	0.018 kg