Gain Switch Table			
A2	A1	A0	Gain
0	0	0	0 dB
0	0	1	10 dB
0	1	0	20 dB
0	1	1	30 dB
1	0	0	40 dB
1	0	1	50 dB
1	1	0	60 dB
1	1	1	70 dB

J2 Pin Out			
Pin	Designation	Pin	Designation
1	+V	2	GND
3	GND	4	OUTPUT
5	-V	6	N.C.
7	A2	8	A1
9	A0	10	N.C.

Note:

Pin 7,8,9: A0-A2 is referring to the three digital pins for the gain adjustment.

Pin 1,5: ±V is referring to the power supply positive/negative voltages.

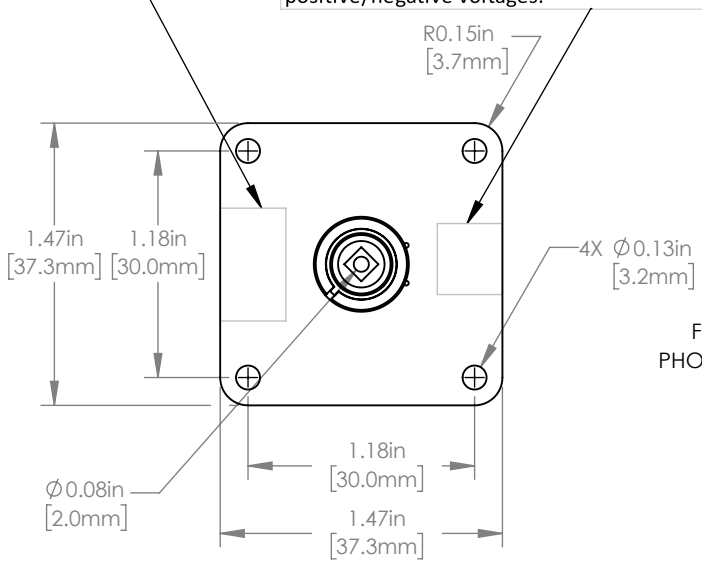

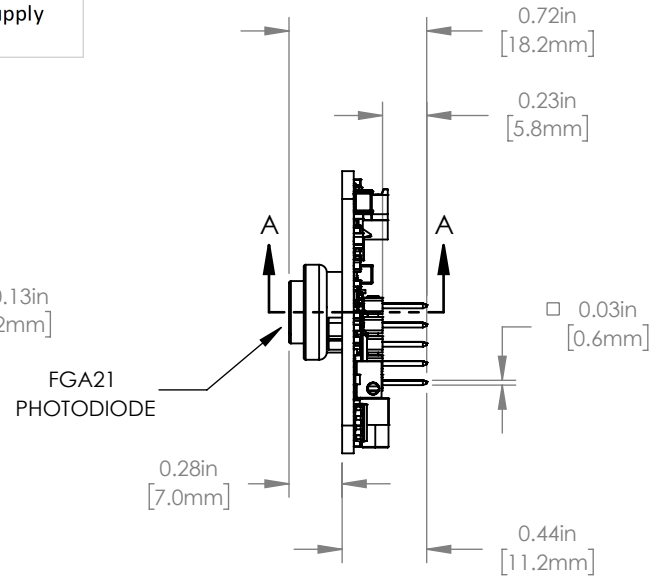

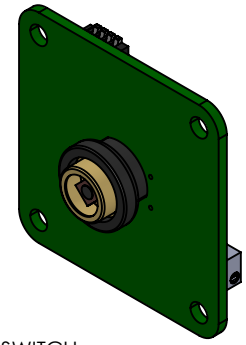

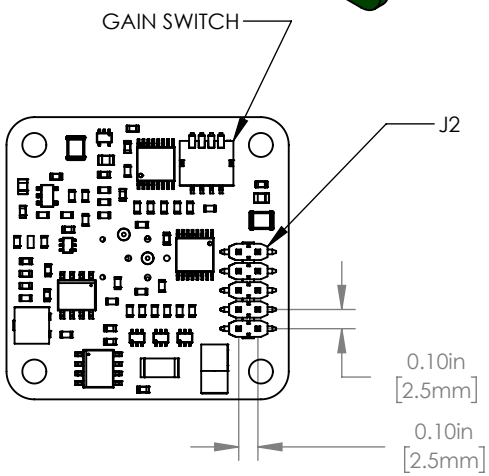

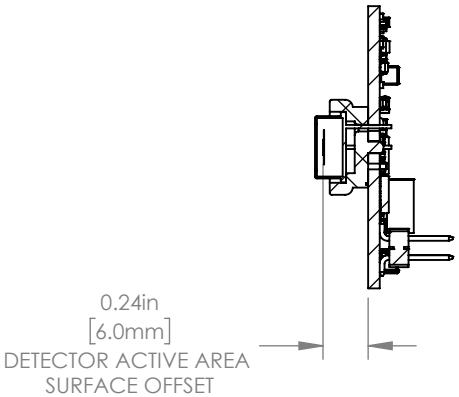

SECTION A-A
SCALE 1 : 1

FOR INFORMATION ONLY
NOT FOR MANUFACTURING PURPOSES

DRAWING PROJECTION		
	NAME	DATE
DRAWN	TA	05/MAY/21
APPROVAL	YM	05/MAY/21

COPYRIGHT © 2021 BY THORLABS

VALUES IN PARENTHESIS ARE CALCULATED AND MAY CONTAIN ROUNDOFF ERRORS

THORLABS
www.thorlabs.com

OEM InGaAs Adjustable Gain Detector

MATERIAL	REV
N/A	A

ITEM #	APPROX WEIGHT
PDAPC4	8 g