Unit:mm

HLV3-22□□-4C
(□□ = RD, SW, BL, GR)

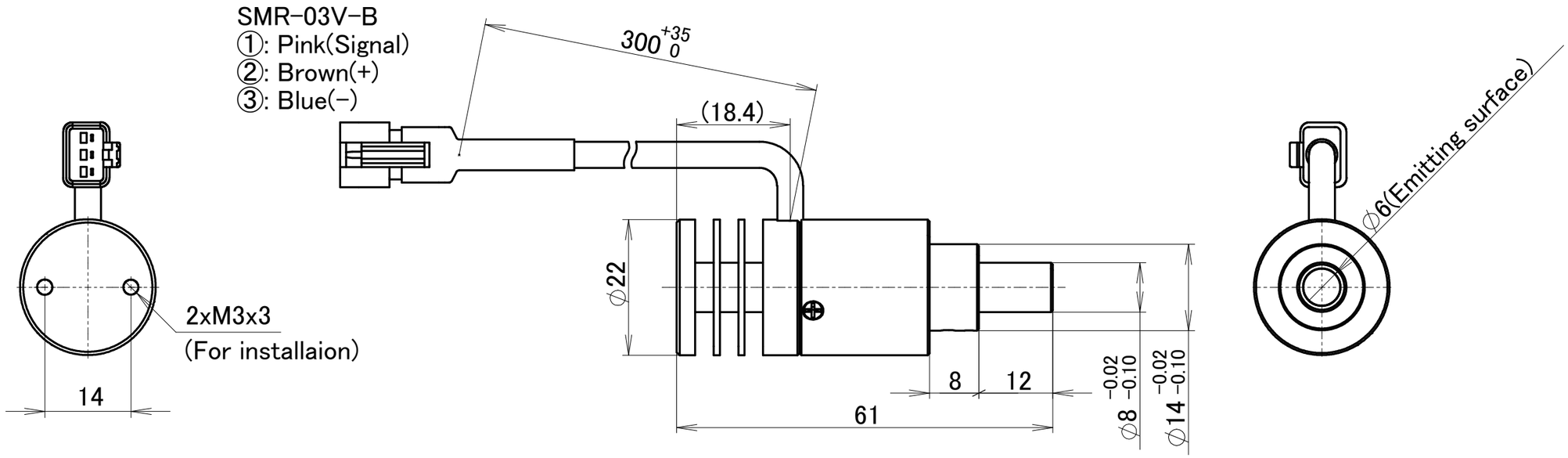

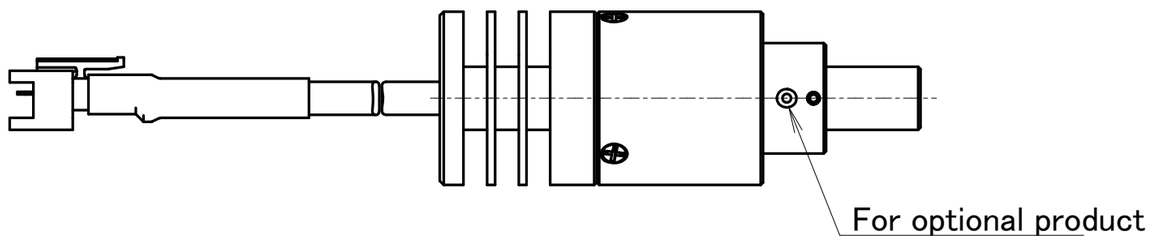

Model	Input Current	Power Consumption
HLV3-22SW-4C	1.00A max.	3.5W max.
HLV3-22RD-4C	1.00A max.	3.0W max.
HLV3-22BL-4C	1.00A max.	3.8W max.
HLV3-22GR-4C	1.00A max.	4.0W max.

Copyright(C) 2020 CCS Inc. All rights reserved. Reproduction or photocopy without permission is prohibited.

CCS Inc.