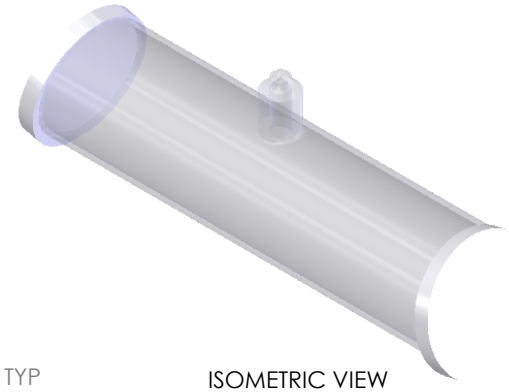

ISOMETRIC VIEW
SCALE 1:1

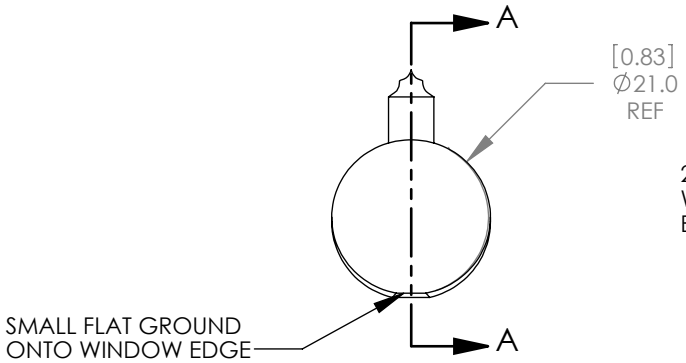

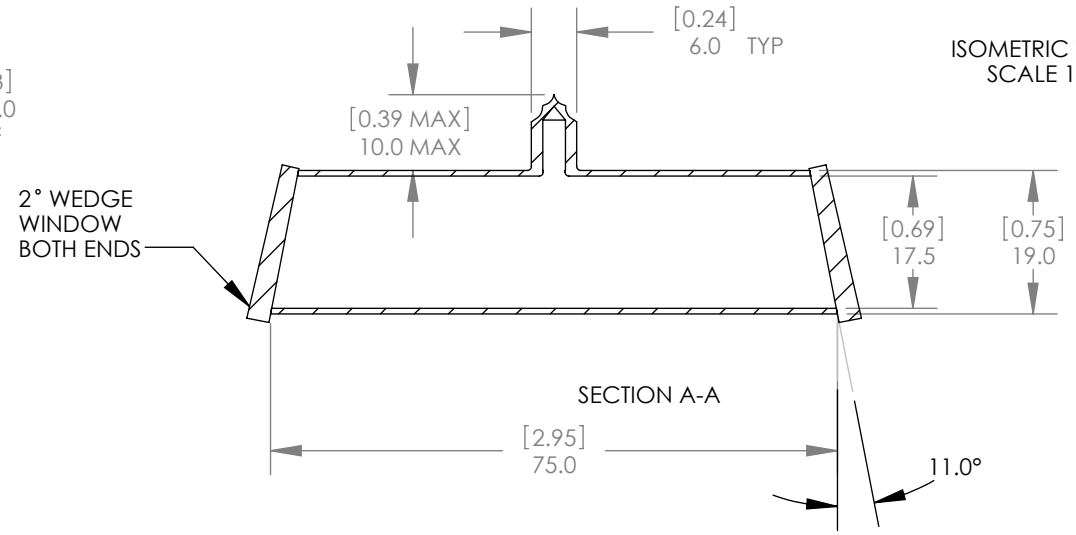

NOTES/SPECIFICATIONS:

1. BODY THICKNESS: 1.5mm
2. DIAMETER TOLERANCE: ±1.6mm
3. DIMENSIONAL TOLERANCE: ±0.8mm
4. PRESSURE @ 25°C: > 0.1-0.2 TORR
5. STEM HEIGHT: <10mm
6. WINDOW ANGLE: 11±1°
7. WINDOW TYPE: WEDGED 2°
8. WINDOW THICKNESS: 3.0mm
9. WINDOW SURFACE QUALITY: 60-40 SCRATCH-DIG
10. WINDOW FLATNESS: λ/4
11. ALL DIMENSIONS ARE IN [in] / mm

	NAME	DATE
DRAWN	GG	08/29/2010
ENG APPR.	BW	09/08/2010
MFG APPR.	DD	09/08/2010

PROPRIETARY AND CONFIDENTIAL

THE INFORMATION CONTAINED IN THIS DRAWING IS THE SOLE PROPERTY OF THORLABS, INC. ANY REPRODUCTION IN PART OR AS A WHOLE WITHOUT THE WRITTEN PERMISSION OF THORLABS, INC. IS PROHIBITED.

THORLABS INC. PO BOX 366 NEWTON NJ

TITLE: Ref. Cell, QUARTZ
Ø19 mm x 75 mm, CESIUM [Cs]

MATERIAL: QUARTZ

SIZE: A

REV.: B

SCALE: 1:1

SHEET 1 OF 1

DWG. NO. 12090-E01

PART NO. CQ19075-CS

5 4 3 2 1