REV.	DESCRIPTION:	NAME/DATE:
1	Web Mechanical Drawing	07/08/1999

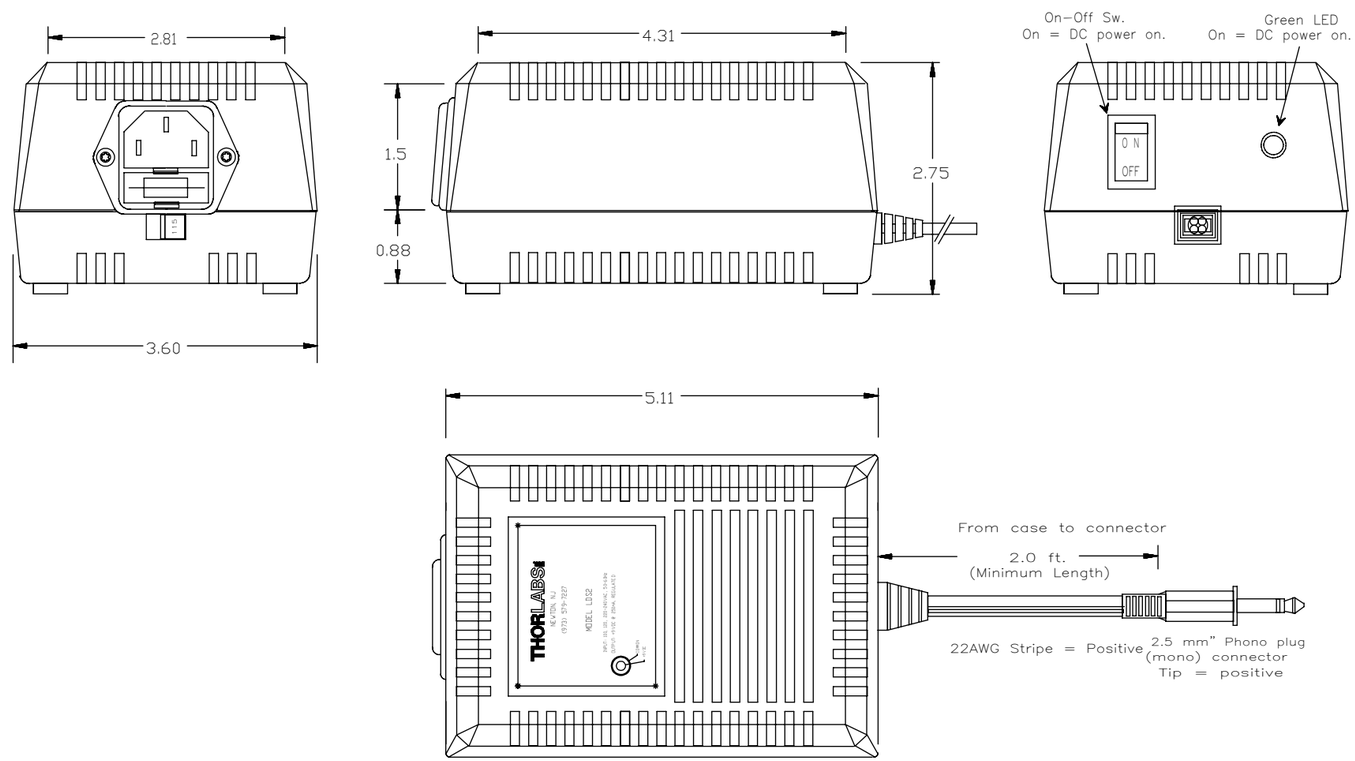

Input: 100 / 120 / 230 VAC 60 / 50 Hz
Output: 9.0VDC @ 250mA (+/- 5%)

TOLERANCES		NAME	DATE
UNLESS OTHERWISE SPECIFIED:	DRAWN	TD	07/08/99
DIMENSIONS ARE IN INCHES LINEAR TOLERANCES: TWO PLACE DECIMAL: ±0.010 THREE PLACE DECIMAL: ±0.005 ANGULAR: ±30' SURFACE FINISH: 32 MICROINCHES PARALLELISM: 0.002 FLATNESS: 0.002 STRAIGHTNESS: 0.002 CONCENTRICITY: 0.002 PERPENDICULARITY: 0.002 THREAD: CLASS 2 FIT	ENG APPR.	SR	07/08/99
	MFG APPR.	XX	XX/XX/XX

PROPRIETARY AND CONFIDENTIAL
THE INFORMATION CONTAINED IN THIS DRAWING IS THE SOLE PROPERTY OF THORLABS, INC. ANY REPRODUCTION IN PART OR AS A WHOLE WITHOUT THE WRITTEN PERMISSION OF THORLABS, INC. IS PROHIBITED.

THORLABS, INC. PO BOX 366 NEWTON NJ

TITLE: LDS2

MATERIAL:

SIZE	REV
B	B

SCALE: 1:1

SHEET 2 OF 2

DWG. NO. 2608-E0W

PART NO. LDS2