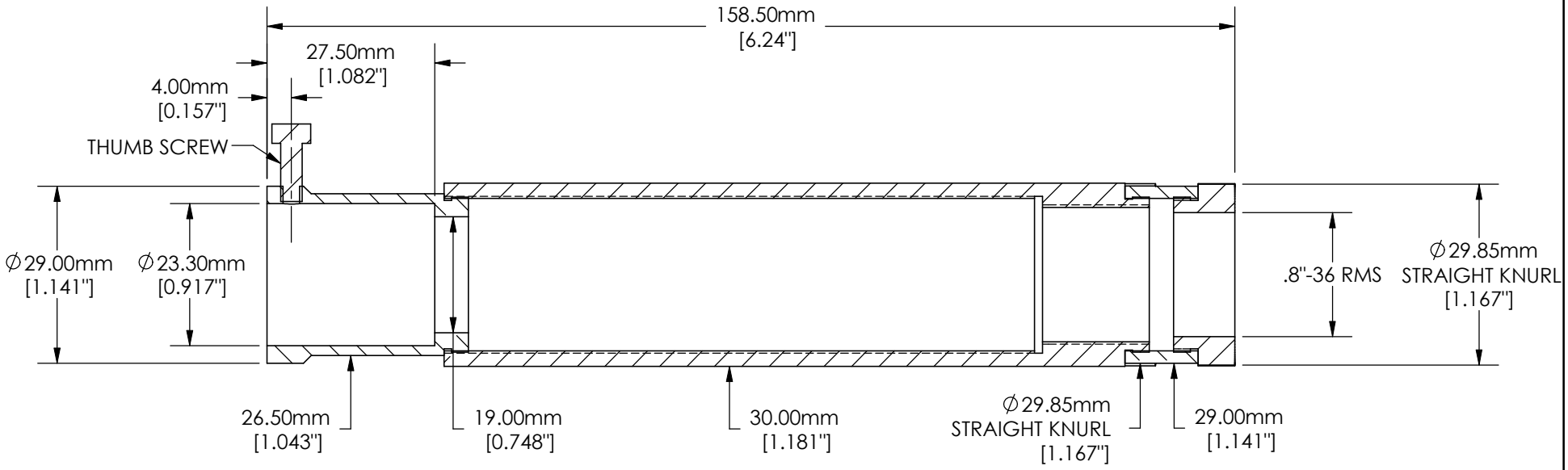

SPECIFICATIONS SUBJECT TO CHANGE WITHOUT NOTICE
DIMENSIONS ARE FOR REFERENCE ONLY

Edmund Optics®

TITLE	DIN OBJECTIVE TO EYEPIECE TUBE ASSEMBLY		
DWG NO	54869	REV	000