REV. #	DESCRIPTION:	NAME/DATE:

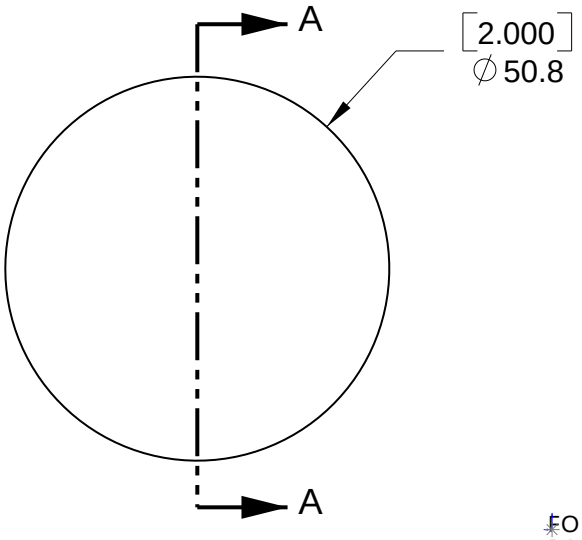

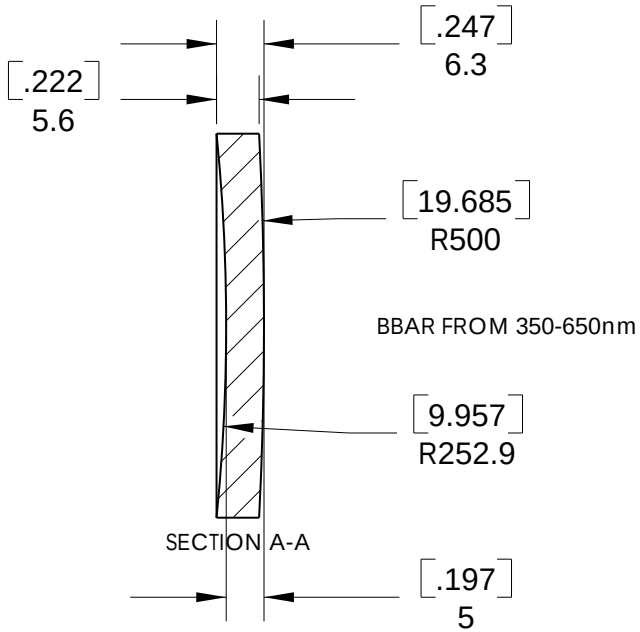

FOCAL LENGTH: -1000.0mm
BACK FOCAL: -996.7mm
INDEX: 1.515 @ 633nm
DESIGN WAVELENGTH: 633nm
SCRATCH/DIG: 40/20
DIAMETER TOLERANCE: +0.00mm/-0.10mm
CLEAR APERTURE: <90%
CENTRATION: 3 ARC MIN
CENTER THICKNESS TOLERANCE: Ñ0.1mm
CHAMFER 0.20mm AT 45Á ALL SHARP EDGES
EDGE THICKNESS ASSUMING SHARP EDGE
AND GIVEN BEFORE CHAMFER

NOTE:

FOR INFORMATION ONLY
NOT FOR MANUFACTURING

ALL UNITS GIVEN IN MILLIMETERS

TOLERANCES

UNLESS OTHERWISE SPECIFIED:

DIMENSIONS ARE IN INCHES
LINEAR TOLERANCES:
TWO PLACE DECIMAL: ±0.010
THREE PLACE DECIMAL: ±0.005
ANGULAR: ±30'
SURFACE FINISH: 32 MICROINCHES
PARALLELISM: 0.002
FLATNESS: 0.002
STRAIGHTNESS: 0.002
CONCENTRICITY: 0.002
PERPENDICULARITY: 0.002
THREAD: CLASS 2 FIT

	NAME	DATE
DRAWN	AP	5/25/2006
ENG APPR.	TO	5/25/2006
MFG APPR.	TO	5/25/2006

PROPRIETARY AND CONFIDENTIAL

THE INFORMATION CONTAINED IN THIS DRAWING IS THE SOLE PROPERTY OF THORLABS, INC. ANY REPRODUCTION IN PART OR AS A WHOLE WITHOUT THE WRITTEN PERMISSION OF THORLABS, INC. IS PROHIBITED.

THORLABS INC. PO BOX 366 NEWTON NJ

TITLE:
Ï 50.8mm BK7 NEGATIVE MENISCUS LENS

MATERIAL:
BK7, Grade A

SIZE: A
REV.: A

SCALE: 1:1

SHEET 1 OF 1

DWG. NO.
4886-E01

PART NO.
LF1591-A

5 4 3 2 1