	PART DESCRIPTION	MATERIAL
1	SM05RR	ANODIZED ALUMINUM
2	LA4647-A	UV FUSED SILICA
3	ENGRAVED HOUSING	ANODIZED ALUMINUM

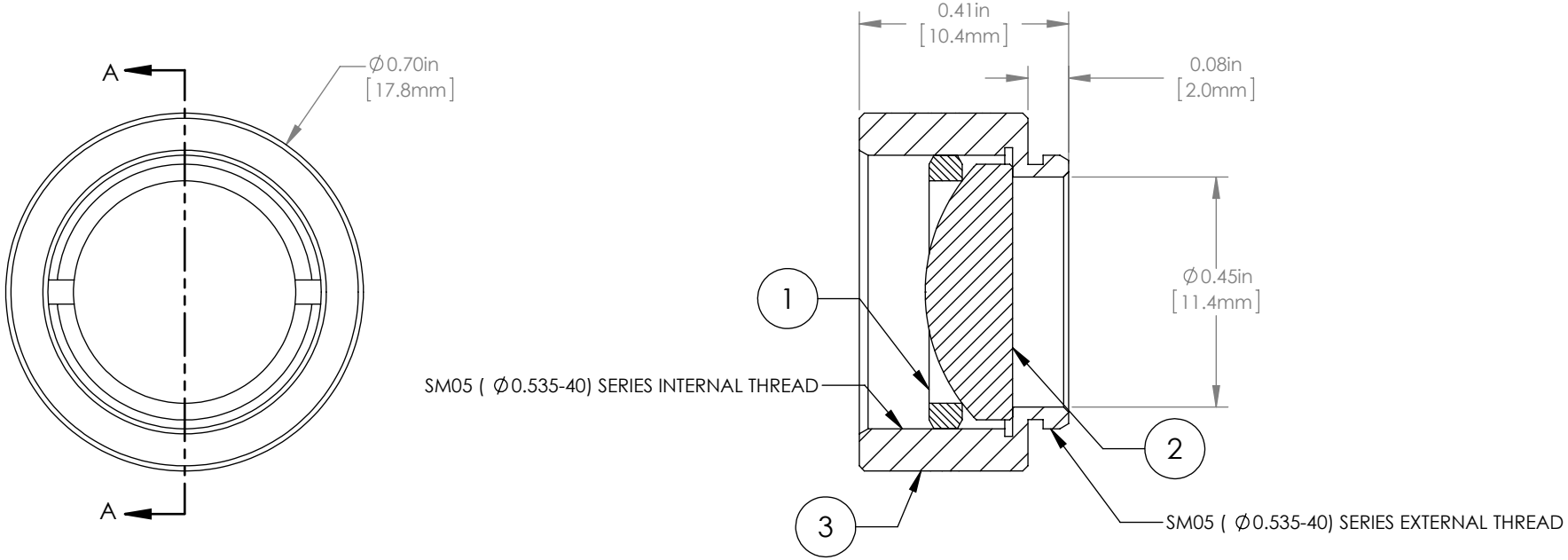

NOTES/SPECIFICATIONS:

1. DESIGN WAVELENGTH: 546nm
2. FOCAL LENGTH: f=20.0mm±1%
3. WORKING DISTANCE (REF): 14.2mm
4. CLEAR APERTURE: >∅11.05mm
5. SURFACE QUALITY: 40-20 SCRATCH-DIG
6. COATING: BBAR Ravg<0.5% FROM 350-700nm, AOI: 0°, ON OUTER OPTICAL SURFACES

FOR INFORMATION ONLY
NOT FOR MANUFACTURING PURPOSES

DRAWING PROJECTION		
	NAME	DATE
DRAWN	GG	13/OCT/15
APPROVAL	DD	13/OCT/15

COPYRIGHT © 2015 BY THORLABS

VALUES IN PARENTHESIS ARE CALCULATED AND MAY CONTAIN ROUNDOFF ERRORS

THORLABS
www.thorlabs.com

∅1/2" MOUNTED PLANO-CONVEX LENS, f=20mm, -A COAT

MATERIAL	REV
SEE TABLE	A

ITEM #	APPROX WEIGHT
LA4647-A-ML	3 g